ROEMHELD

WZ 8.8901A

Die Changing Carts RW 600 / RWA 1000 elmo
manually movable or fully electric lifting and moving with docking bar, load capacity up to 1,000 kg

RW 600 elmo "**el**ectric **mo**tion"

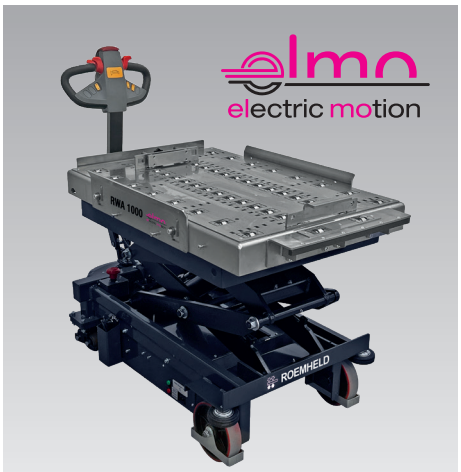

RWA 1000 elmo "**el**ectric **mo**tion"

Advantages
- Quicker and safer die change
- Precise positioning thanks to docking station
- Electric lifting and moving
- Protection against dies falling off thanks to side rails, front rail, and adjustable insertable bars
- Die-friendly transport
- Secure hold of the die changing lifting table thanks to parking brake

Application
Die changing carts facilitate the handling of medium-weight dies and enable dies weighing up to 1,000 kg to be safely transported in an easy and time-saving way.
All cart types are specifically designed for pressing and punching dies as well as for injection and casting moulds.

Description
These special die changing carts are available in double scissor versions with different lifting heights, manually or fully electrically movable, and with a sturdy roller table or as a smooth steel plate. They are made of robust steel and can make tight turns. Thanks to a compact design, all changing carts can be used in tight production spaces.

The combination of a table with roller or ball inserts and a battery-powered electric drive offers additional convenience and the safety required when changing dies. The stainless steel table is equipped with sturdy rollers that allow dies to be safely loaded into the press.
Adjustable stops prevent the dies from slipping during transport. The roller table has various holes for several safety bars to optimally prevent dies of different sizes from slipping.
The roller table is equipped with a docking bar for safe transfer of the die to the press.
For transport, the centre of gravity of the load must be positioned in the centre of the cart and the lifting columns must be completely lowered.

Colour: RAL 7021 (dark grey, powder coating), black scissors, stainless steel roller table

Changing cart versions:
RW 600 elmo "**el**ectric **mo**tion"
- Up to 1,520 mm table height
- Manual moving
- Electro-hydraulic lifting and lowering
- Load capacity up to 600 kg
  see page 2

RWA 1000 elmo "**el**ectric **mo**tion"
- Up to 1,485 mm table height
- Fully electric moving
- Electro-hydraulic lifting and lowering
- Load capacity up to 1,000 kg
  see page 3

Additional table versions:
see page 6
- **Version 1**
  with roller inserts, without lifting function
- **Version 2**
  with lowerable rollers and mechanical lifting function
- **Version 3**
  with ball inserts, without lifting function
- **Version 4**
  with lowerable hydraulic ball bars + hand pump
- **Version 5**
  with swivelling bridge

Accessories
see page 7

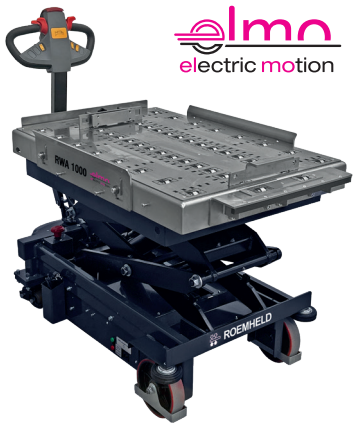

Version RWA 1000 elmo with roller table

Multi-functional drawbar

Multi-functional drawbar:
- driving switch for continuous and sensitive driving
- Push-button for lifting and lowering
- Toggle switch for two speeds (2 km/h and 4 km/h)
- Safety push-button with stop function
- Signal horn + emergency stop push-button
- Display for battery charge level and service hours counter
- Key switch for on / off

RW 600 elmo "**el**ectric **mo**tion"

- Double scissor lift up to 1,520 mm table height
- Manual moving
- Electro-hydraulic lifting and lowering
- Roller table
- Docking bar

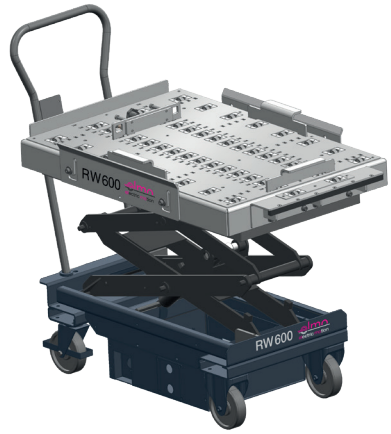

Technical characteristics

Load capacity	[kg]	600
Bed height	[mm]	610 – 1,520
Brake		on both steering rollers
Wheels		PU
Weight	[kg]	approx. 330
Battery charger		12 V, 8 A (Built in)
Battery	[Ah]	43
Battery performance		approx. 40 × lift and lower under full load

Mould / die dimensions

min. 200 × 200 mm
max. 1,000 × 700 mm
max. 1,000 × 900 mm with extension

Optional Accessory

For transporting larger dies on the die changing cart, optional side bar extensions can be used.

Extension / side bar
(1 set = 2 pcs.)
Part no. 7 8916 0019

Operation:

- Push-button for lifting and lowering
- Display for battery state of charge
- without signal horn and key switch

Dimensions

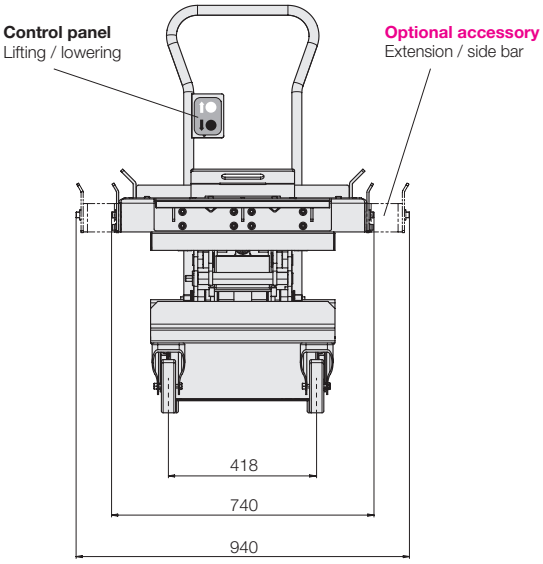

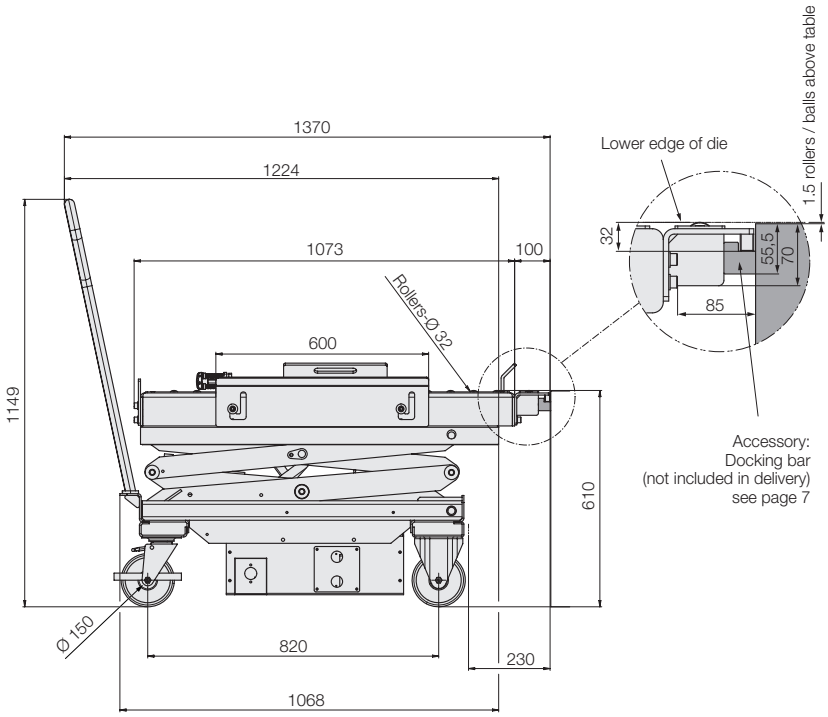

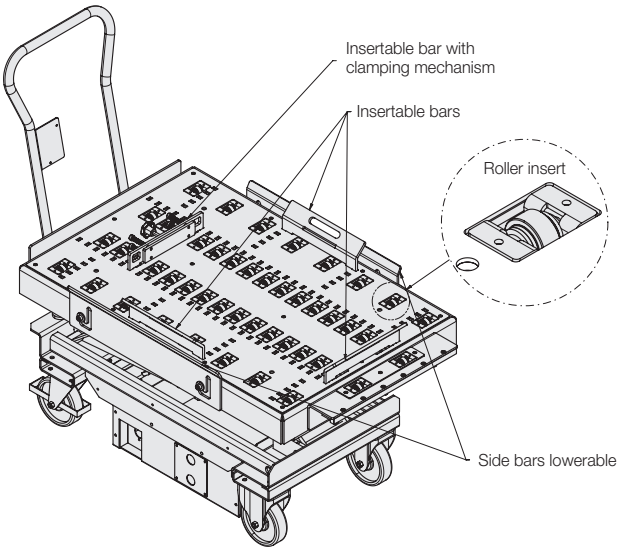

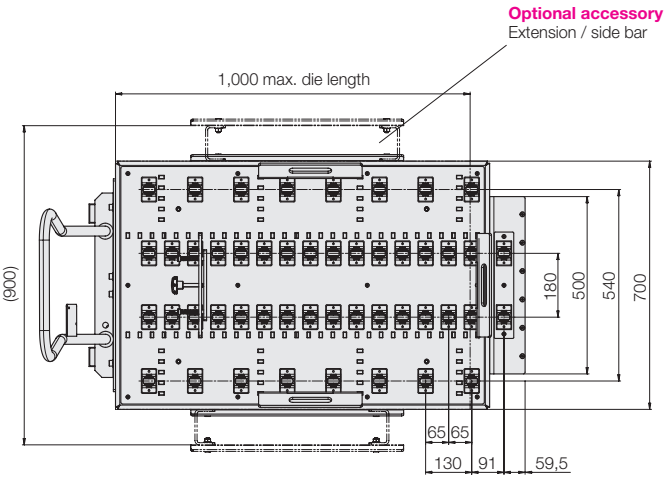

RWA 1000 elmo "electric motion"

- Double scissor lift up to 1,485 mm table height
- Fully electric moving
- Electro-hydraulic lifting and lowering
- Roller table
- Docking bar

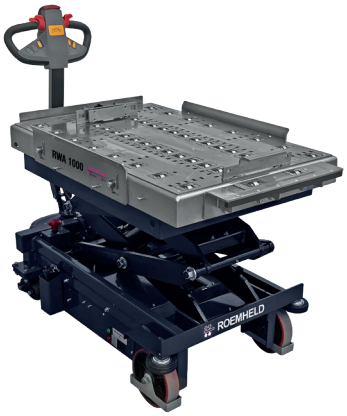

Technical characteristics

Load capacity	[kg]	1,000
Bed height	[mm]	620–1,485
Brake		Motor break
Wheels		PU
Weight	[kg]	approx. 400
Battery charger		24 V, 8 A (Built in)
Battery	[Ah]	50
Displacement speed	[km/h]	4.0
Creep speed	[km/h]	1.6
Reversing	[km/h]	1.6/2.0
Battery performance	[km]	8 (with full load)

Mould / die dimensions

min. 200 × 200 mm
max. 1,000 × 700 mm
max. 1,000 × 900 mm with extension

Optional accessory

For transporting larger dies on the die changing cart, optional side bar extensions and an extended stop at the back can be used.

Extension, stop at the back

Part no. 520731193

Extension / side bar

(1 set = 2 pcs.)

Part no. 7 8916 0019

Dimensions

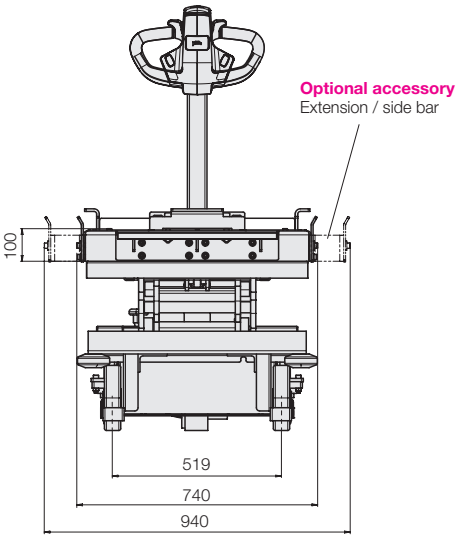

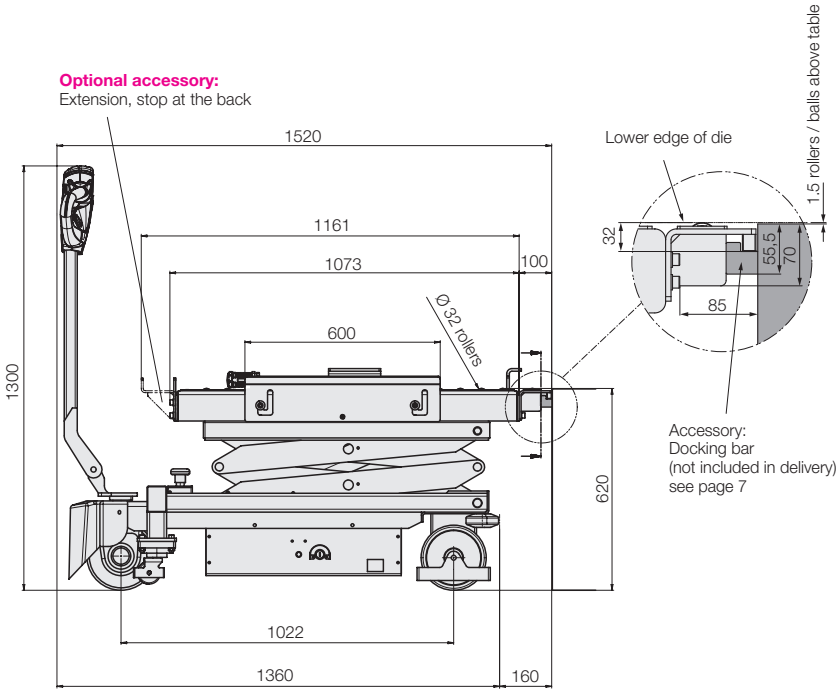

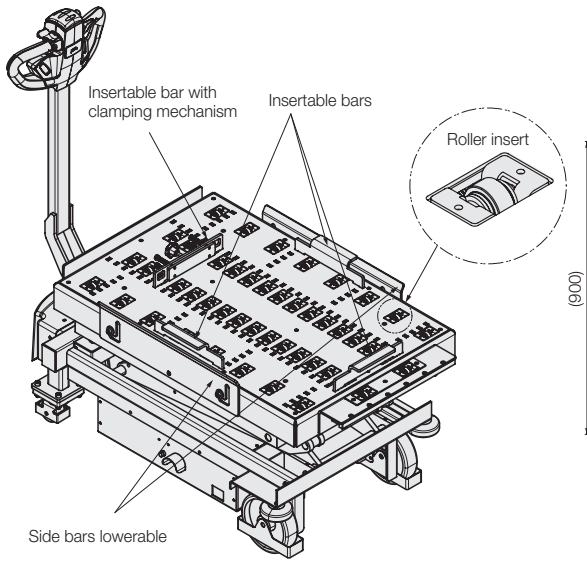

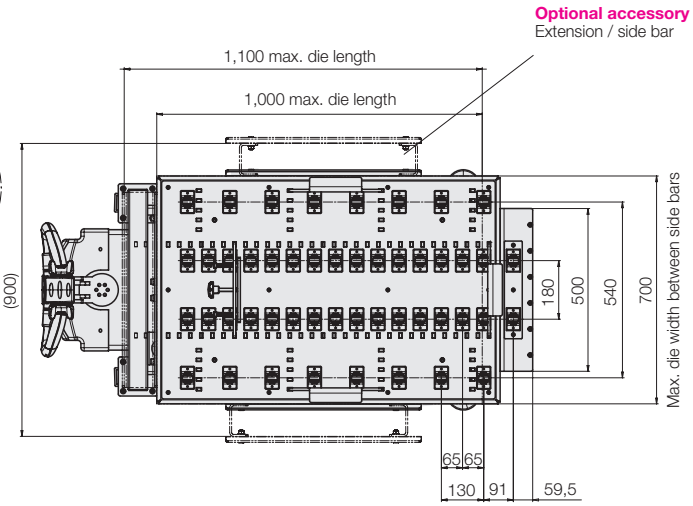

Version 1

Roller table with roller inserts, without lifting function

In this version, the dies are pushed into the press using fixed roller inserts in the roller table. The dies are secured manually by the operator during transport using adjustable insertable bars.
Docking to the press table provides the optimum entry height and prevents the cart from rolling away.
This version also works without a docking bar on the press table.

RW 600 elmo,
With roller table version 1

Power supply	Part no.
230 V/50 Hz	**889160500**
120 V/60 Hz	**889161500**

RWA 1000 elmo,
With roller table version 1

Power supply	Part no.
230 V/50 Hz	**889160001**
120 V/60 Hz	**889161001**

Dimensions

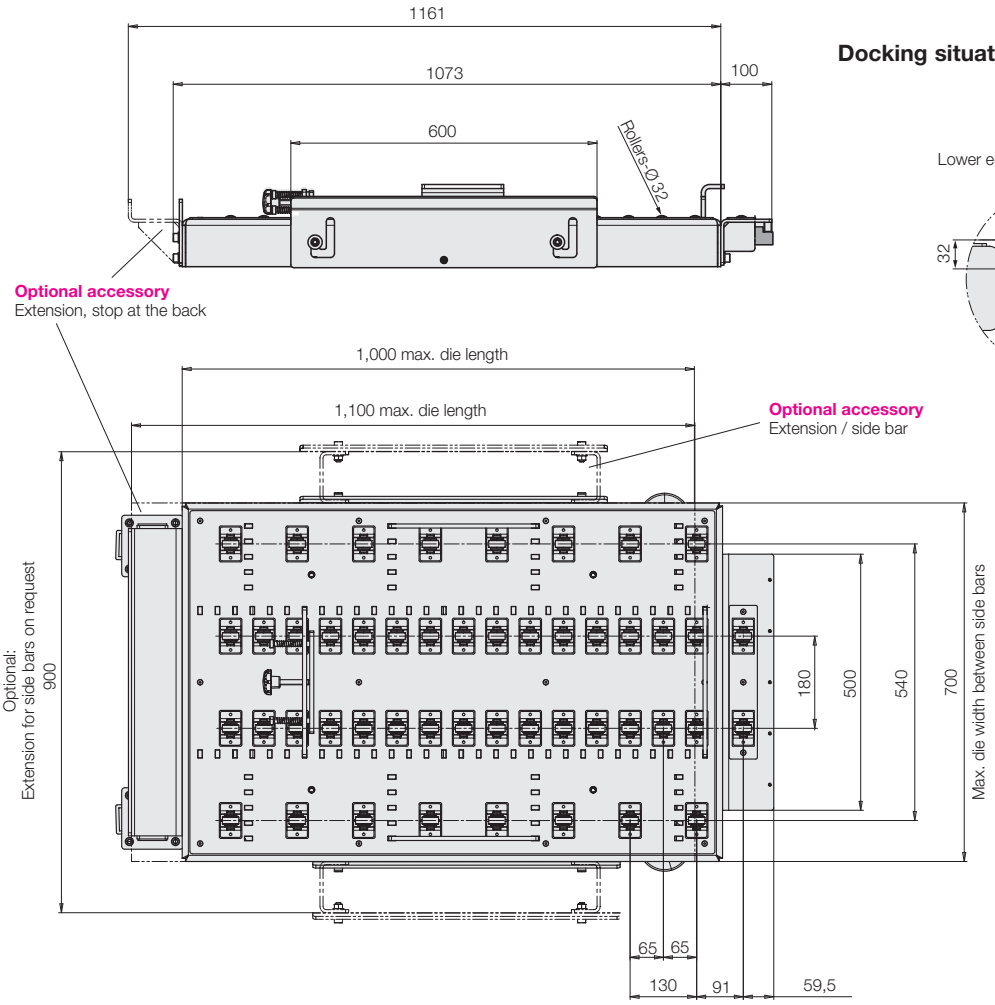

Docking situation

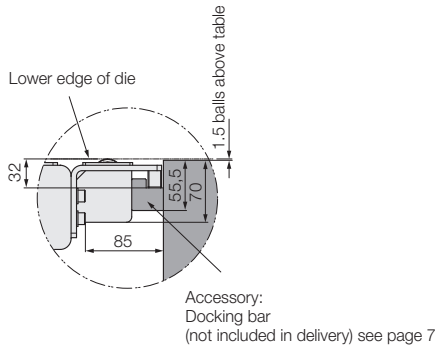

Optional accessory

For transporting larger dies on the die changing cart, optional side bar extensions can be used.

Extension, stop at the back

Part no. 520731193

Extension / side bar

(1 set = 2 pcs.)

Part no. 789160019

Version 2

Roller table with lowering rollers and lifting function

In this version, the rollers in the roller table are raised when the changing cart is docked. When the dies are transported, they rest on the platform and are secured against slipping.
The rollers can only be raised by docking to a press table or a rack system. Insertable safety bars on the die changing cart also secure the dies to be transported to prevent them from falling.
This version requires a docking bar on the press table.

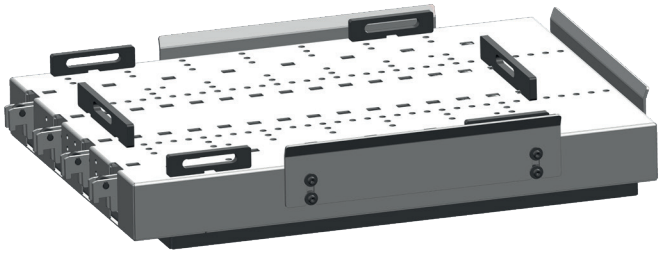

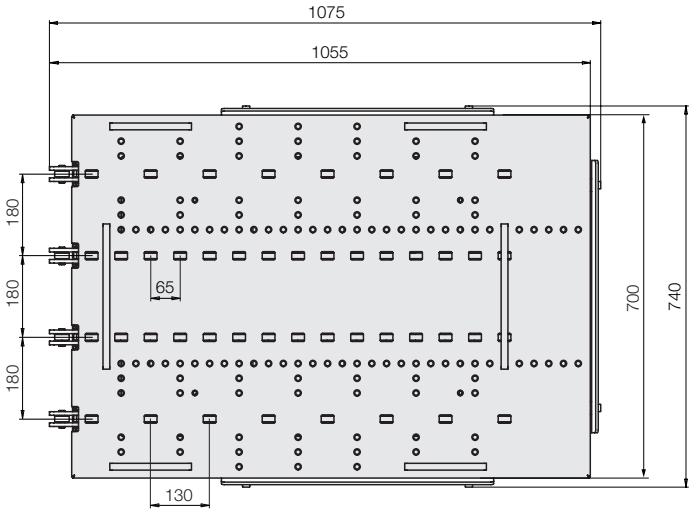

RW 600 elmo,
with roller table version 2

Power supply	Part no.
230 V/50 Hz	**889160600**
120 V/60 Hz	**889161600**

RWA 1000 elmo,
with roller table version 2

Power supply	Part no.
230 V/50 Hz	**889160100**
120 V/60 Hz	**889161100**

Version 3
with ball inserts, without lifting function

In this version, the dies are pushed into the press using fixed ball inserts in the ball table. The dies are secured manually by the operator during transport using adjustable insertable bars.
Docking to the press table provides the optimum entry height and prevents the cart from rolling away.
This version also works without a docking bar on the press table.

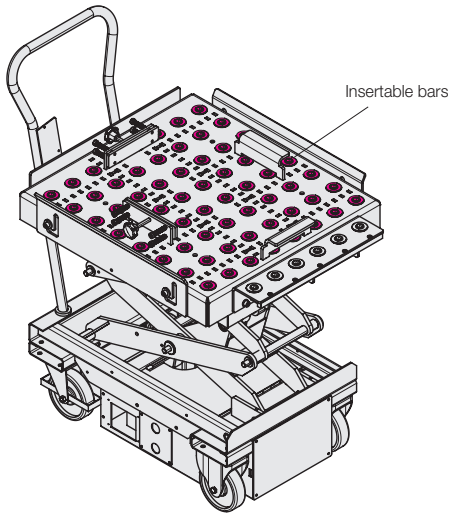

Version 4
with lowerable hydraulic ball bars and hand pump

In this version, the built-in hydraulic ball bars in the die changing table are raised using a separate hydraulic hand pump. The dies are secured manually by the operator during transport using adjustable insertable bars.
This version also works without a docking bar on the press table.

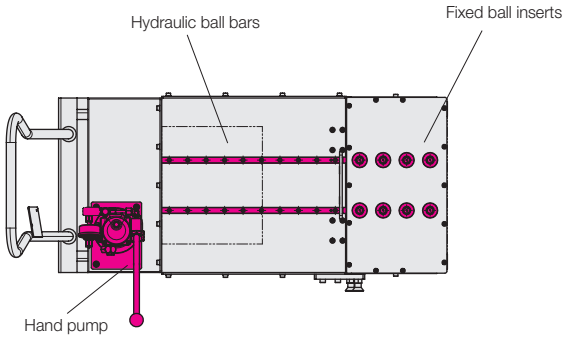

Version 5
with swivelling bridge

RW 600 and RWA 1000 elmo are available as versions with an attached bridge. The changing table is equipped at the front with a bridge and docking bar for docking onto the press bed. This makes it easy to bridge over colliding edges on the press table.

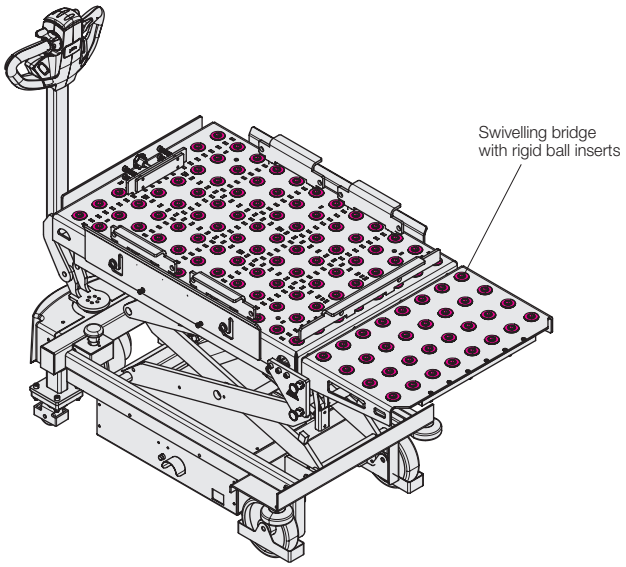

Docking bars on the press

To achieve the precise insertion height on the press table, the press table on the changing cart is fitted with screw-in docking bars.
Docking bars for the press are not included with the changing cart and must be ordered separately.

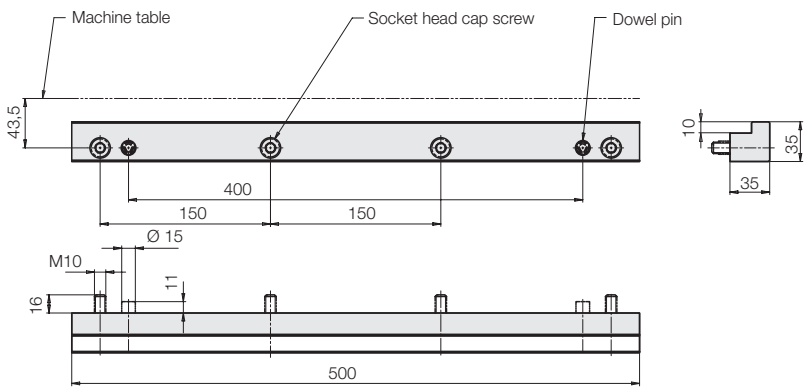

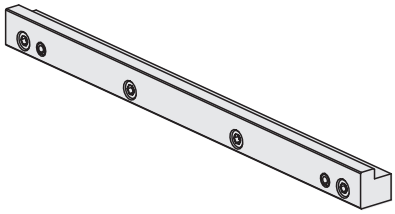

Docking bar, one-piece

Part no.

Length 500 mm 7 8914 0003

Length 600 mm 7 8914 0009

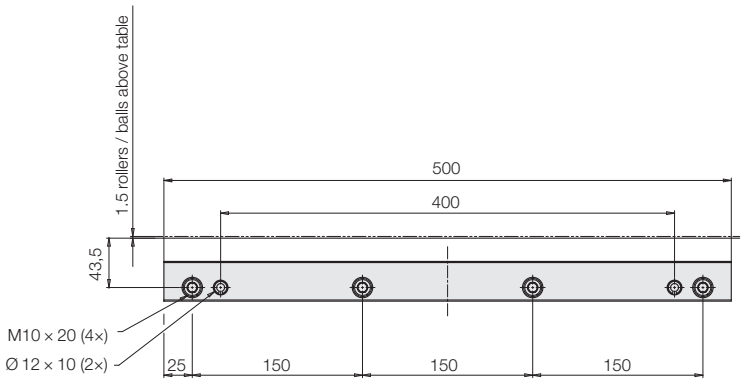

Docking bar, two-piece (1 set= 2 bars)

Part no.

Length 500 mm 7 8914 0010

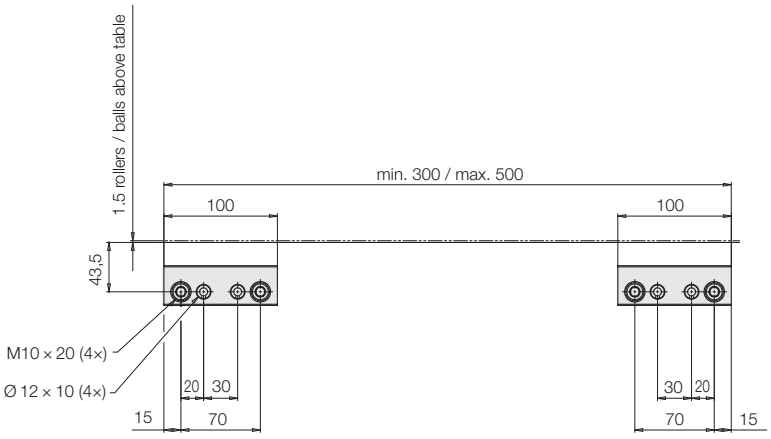

Additional accessories on request:

- Ram protection and die insert slope anchored to floor
- Acoustic or visual tilt indicator