Block Cylinder

with bronze housing for adjustable magnetic sensors, double acting, max. operating pressure 500 bar

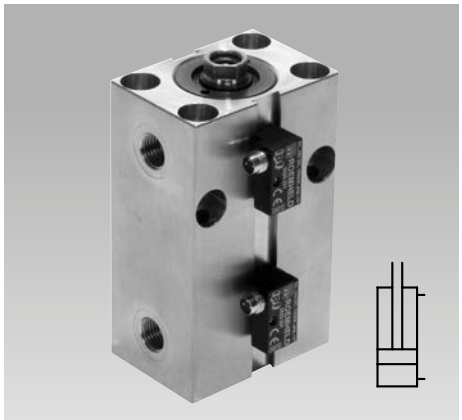

Application

Compact, double-acting short-stroke cylinder with very high press and pulling force and adjustable control of the piston position by magnetic sensors.

Description

The cylinder housing of this variante of the proved ROEMHELD block cylinders consists of a non-magnetizable bronze alloy. A permanent magnet is fixed at the piston, the magnetic field of the piston can be monitored by exterior magnetic sensors. The magnetic sensors are guided in dovetail slots and allow a continuous control of the piston position.

Advantages

- 5 sizes with 3 stroke lengths
- Compact block design
- Same dimensions as block cylinder with aluminium housing, as per data sheet B 1.554
- Same dimensions as block cylinder with steel housing, except for total length
- Many fixing possibilities
- Fixing screws countersunk
- Oil supply optionally with fittings or by drilled channels
- Magnetic sensors can be used up to 100 °C
- Fixing of the sensors at 2 sides possible
- Easy adjustment of switching point positions
- Corrosion-resitant version available
- FKM seals available
- Maintenance free

Variants available:
- Shorter stroke
- Keyway
- Internal thread instead of mounting holes in the body

Corrosion-resistant version available

Fixing possibilities

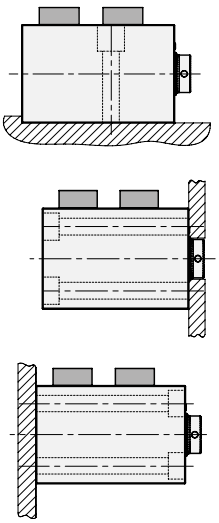

Connecting possibilities

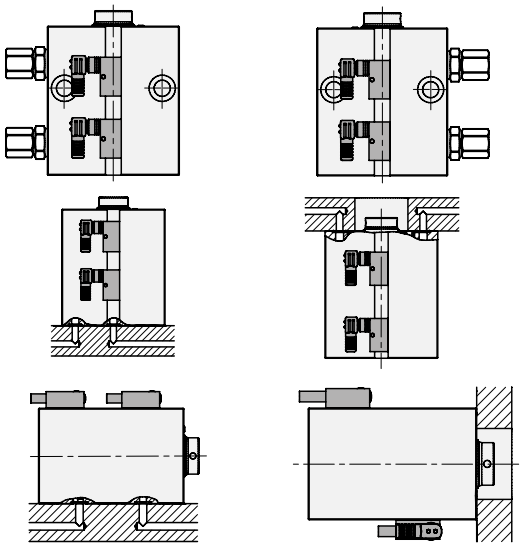

Important notes

1. Fittings

Use only fittings with elastic sealing instead of knife-edge sealing (see data sheet F 9.300). Fittings with tappered thread must not be used.

2. Flow control of the oil flow

Throttling has to be made in the oil supply line to the block cylinder. This avoids pressure intensification and thereby pressures exceeding 500 bar. The hydraulic circuit diagram shows flow control valves which allow oil return from the block cylinder without any impediments.

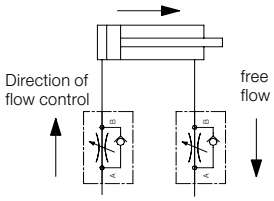

3. Influence of the magnetic field

Due to steel in the immediate vicinity of the block cylinder the magnetic field of the piston will be deflected. Thereby the switching points of the magnetic sensors are displaced and a modified adjustment will be required.

If absolutely no defined switching point can be adjusted, one can try to use fixing screws made of special stainless steel.

In case of ferritic swarf, the conditions differ from stroke to stroke and thereby an exact adjustment is impossible. In such applications a cover can solve the problem, however the distance to the magnetic sensors has to be at least 30 mm.

4. Cleanness of the hydraulic oil

Ferritic swarf in the hydraulic oil are attracted by the permanent magnet at the piston and accumulate in the cylinder area. Thereby guides and sealings can be damaged. Therefore all tubes, hoses and drilled channels have to be carefully cleaned before start up. We recommend high-pressure filters with filter quality of 10 µm (see data sheet F 9.500).

5. Admissible operating pressure

Magnetic sensor	154XX5X Perbunan	154XX6X FKM
without	–25 ... +100 °C	–20 ... +120 °C
with	–25 ... +100 °C	–20 ... +100 °C

6. Materials

The cylinder housing consists of a bronze alloy, the piston of case-hardening steel and the threaded bushing of free-cutting steel. Piston and threaded bushing of the corrosion-resistant version (154X4XX) are of special stainless steel

Other data see data sheet A 0.100.

Application example

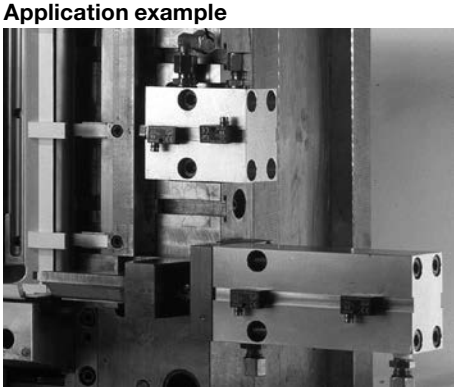

Connecting thread for fittings with elastic sealing (see “Important notes”)

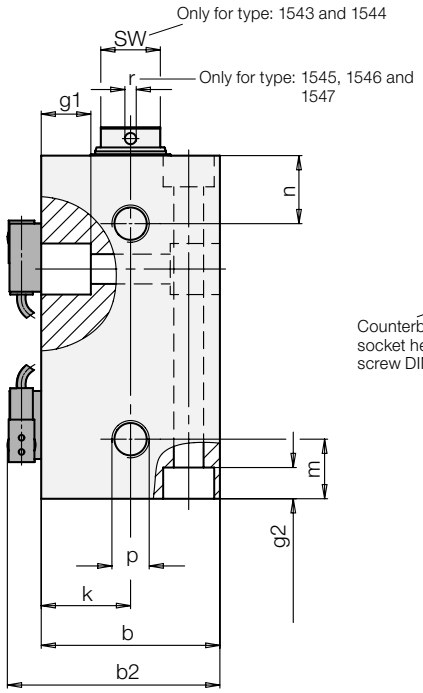

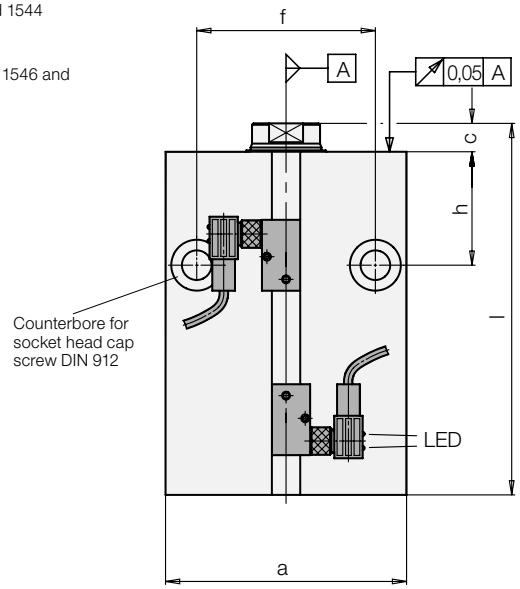

Accessory: Magnetic sensors see page 4

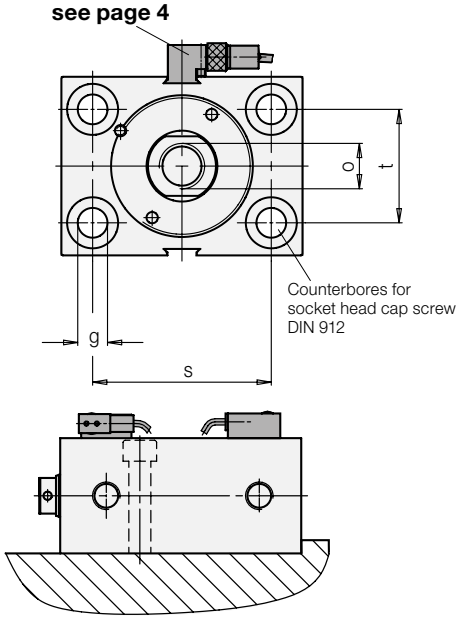

Cylinders must be backed up for operating pressures exceeding 160 bar.

Piston Ø D		[mm]	25	32	40	50	63
Rod Ø d		[mm]	16	20	25	32	40
Force to push at	100 bar	[kN]	4.9	8.0	12.5	19.6	31.2
	500 bar	[kN]	24.5	40.2	62.8	98.5	156
Force to pull at	100 bar	[kN]	2.9	4.9	7.7	11.6	18.6
	500 bar	[kN]	14.5	24.5	38.3	57.9	93
Oil volume//10 mm stroke	Stroke to extend	[cm³]	4.91	8.05	12.56	19.63	31.17
	Stroke to retract	[cm³]	2.9	4.9	7.7	11.6	18.6
a		[mm]	65	75	85	100	125
b		[mm]	45	55	63	75	95
b2		[mm]	57	67	75	87	107
c		[mm]	7	10	10	10	14
f		[mm]	50	55	63	76	95
g		[mm]	8.5	10.5	10.5	13	17
g1 at both sides		[mm]	12	16	17	22	–*
g2 at both sides		[mm]	9	11	11	13	17
h		[mm]	33	38	40	44	50
k		[mm]	22.5	27.5	31.5	37.5	47.5
m		[mm]	18	20	21	21	26
n		[mm]	18	22	24	27	26
o x depth of thread		[mm]	M10 x 15	M12 x 15	M16 x 25	M20 x 30	M27 x 40
p			G 1/4	G 1/4	G 1/4	G 1/4	G 1/2
r		[mm]	–	–	4	4	4
s		[mm]	50	55	63	76	95
t		[mm]	30	35	40	45	65
SW		[mm]	13	17	–	–	–
Stroke ±1		**[mm]**	**20**	**25**	**25**	**25**	**30**
Total length l ±1		[mm]	85	100	106	117	135
Weight		[kg]	1.3	2.2	3.1	4.8	8.6
Part no. (without magnetic sensors)			**1543553**	**1544553**	**1545553**	**1546553**	**1547553**
Stroke ±1		**[mm]**	**50**	**50**	**50**	**50**	**63**
Total length l ±1		[mm]	115	125	131	142	168
Weight		[kg]	1.9	2.8	3.9	5.9	11
Part no. (without magnetic sensors)			**1543556**	**1544556**	**1545556**	**1546556**	**1547556**
Stroke ±1		**[mm]**	**100**	**100**	**100**	**100**	**100**
Total length l ±1		[mm]	165	175	181	192	205
Weight		[kg]	2.8	4	5.5	8.2	13.6
Part no. (without magnetic sensors)			**1543559**	**1544559**	**1545559**	**1546559**	**1547559**

Part no.	**Version**
154X**4**XX	corrosion-resistant
154XX**6**X	FKM seals (see page 1 “Admissible operating pressure”)

***** Type 1547 without counterbores

Oil supply and O-ring sealing at:

Broad side
Stroke 20 – 30 mm
K

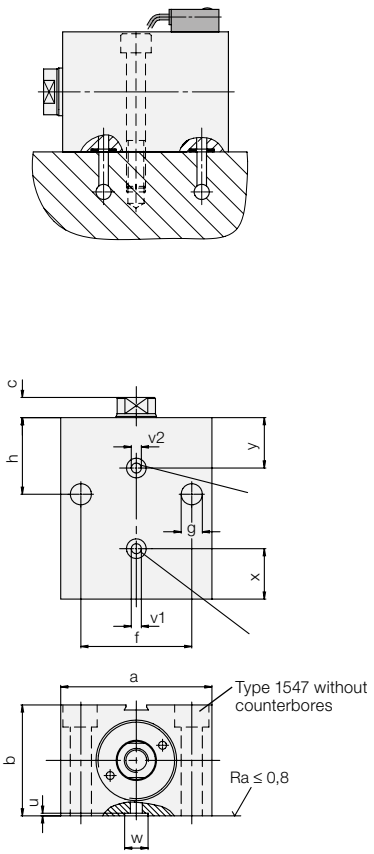

Broad side
Stroke 50 – 100 mm
L

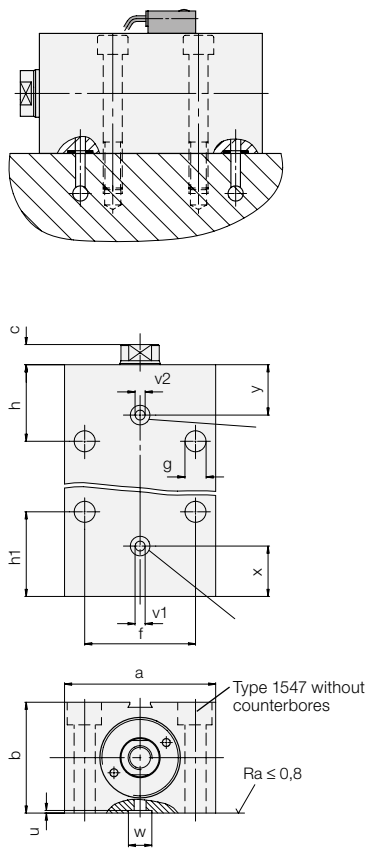

Rod side
S

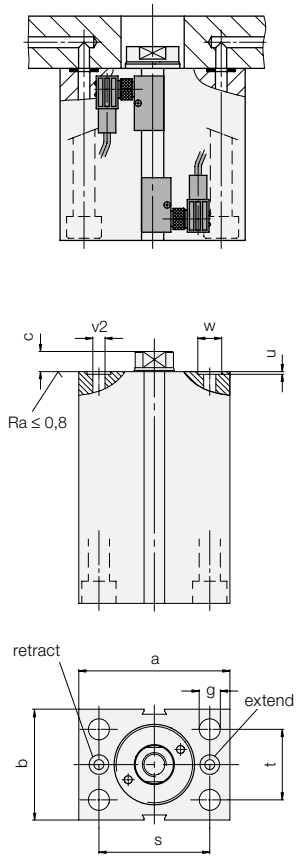

Bottom side
B

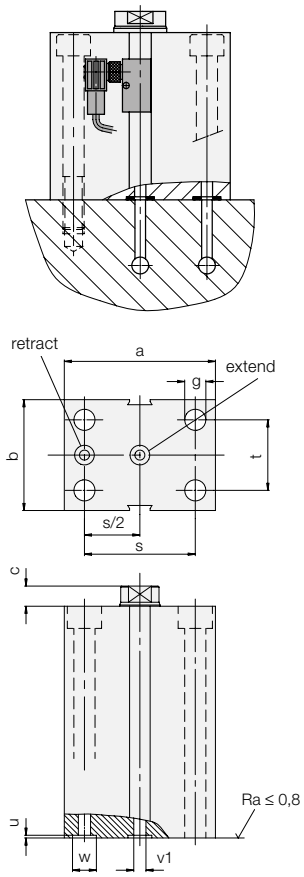

Block cylinder		**1543XXX**	**1544XXX**	**1545XXX**	**1546XXX**	**1547XXX**
Piston Ø	[mm]	25	32	40	50	63
Rod Ø	[mm]	16	20	25	32	40
a	[mm]	65	75	85	100	125
b	[mm]	45	55	63	75	95
c	[mm]	7	10	10	10	14
f	[mm]	50	55	63	76	95
g	[mm]	8.5	10.5	10.5	13	17
h	[mm]	33	38	40	44	50
h1	[mm]	40	42	44	47	60
s	[mm]	50	55	63	76	95
t	[mm]	30	35	40	45	65
u ± 0.05	[mm]	1.1	1.1	1.1	1.1	1.3
v1	[mm]	4	5	6	6	8
v2	[mm]	4	4.5	4.5	6	6
w + 0.2	[mm]	9.8	10.8	10.8	10.8	15.8
x	[mm]	21.5	25	27	30	35
y	[mm]	21	25	27	29.5	32
Dimensions O-ring	[mm]	7 x 1.5	8 x 1.5	8 x 1.5	8 x 1.5	12.42 x 1.78
Part no. spare O-ring		**3000342**	**3000343**	**3000343**	**3000343**	**3000335**
Part no. O-ring (FKM)		**3001077**	**3000275**	**3000275**	**3000275**	**3001152**

O-rings are included in delivery.

Other dimensions see page 2.

Order:
Please add the identification letters **K, L, S, or B** to the Part no. of the required block cylinder

Example of ordering:
Double-acting block cylinder 1545553 (25 stroke) with oil supply at the broad side
Part no. 1545553 K

Compared with traditional reed switches the electronic magnetic sensors offer the following advantages:

- Indifference to shock and vibration
- Bounce-free output signal
- Only one switching point
- Wear resistant
- Protection against reverse battery
- Protected against short circuits

Electric connection is made as per traditional inductive proximity switches; up to four magnetic sensors can be connected in series.

Minimum distance of the switching points: 6 mm.

For further information about voltage supply for position controls see data sheet G 2.140.

Electronic magnetic sensor

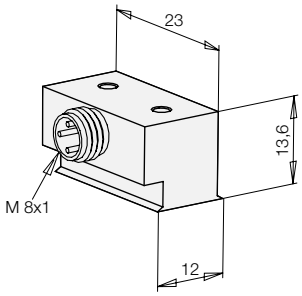

Connecting cable with right angle plug

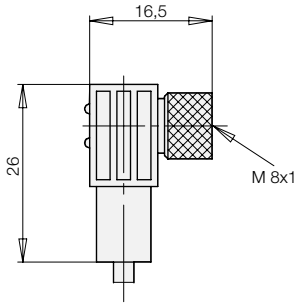

Temperature curve

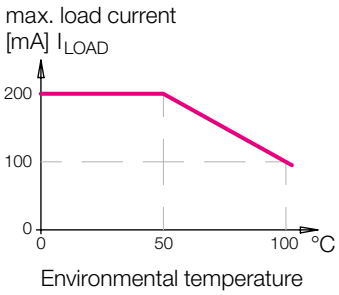

Connecting scheme

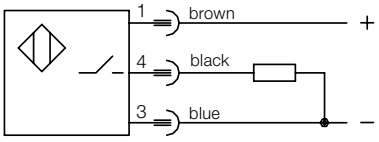

pnp (+) switching

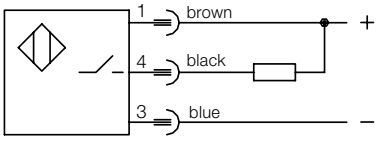

npn (–) switching

Technical data	Electronic magnetic sensor		Connecting cable with right angle plug	
Body material	aluminium black lacquered			
Voltage	10 – 30 V DC		10 – 30 V DC	
Residual ripple	max. 10%			
Current load I_{LOAD}	200 mA – up to 50 °C 150 mA – at 75 °C 100 mA – at 100 °C			
Current consumption	< 15 mA			
Voltage drop (max. load)	< 2 V			
Protected against short circuits	yes			
Protection against reverse battery	installed			
Switching frequency	1 kHz			
Switching hysteresis	3 mm			
Protection as per DIN 40050	IP 67		IP 67	
Environmental temperature	–25 °C up to +100 °C		–25 °C up to +90 °C	
Plug connection	M8-plug		M8-plug	
LED	no		Voltage (green)	
			Function display (yellow)	
Cable, length of cable			PUR, 5 m	
Output (interlock)	**pnp**	**npn**	**pnp**	**npn**
Part no. (1 off)	**3829234**	**3829240**	**3829099**	**3829124**

Further accessory

see data sheet G 2.140

- Pin-and-socket connector
- Y-distributor
- Reversing plug
- Voltage regulator
- Straight tube male stud coupling with elastic sealing

Note:
Electronic magnetic sensors for an environmental temperature of +120 °C or with short path are available on request.

Type L				**Part no.**
D 8 L	ED for tube Ø 8	G 1/4	250 bar	**9208131**
D 15 L	ED for tube Ø 15	G 1/2	250 bar	**9215033**

Type S				**Part no.**
D 8 S	ED for tube Ø 8	G 1/4	500 bar	**9208132**
D 16 S	ED for tube Ø16	G 1/2	500 bar	**9216021**

Other fittings see data sheet F 9.300